INTEC

Operation Manual

Conveyor Belt TBK

Series

TBK 24, TBK/TBM 110, TBK/TBM 230, TBK/TBM 400, TBK/TBM 460

This operation manual is a part of the technical documentation of the respective conveyor belt according to the EC directives for machines.

This operation manual corresponds with MRL Annex. I 1.7.4.

These operation manual is intended for the plant manager, who must pass them on to the staff who is responsible for the installation, connection, operation and maintenance of the machine. He must make sure that the information contained in the operation manual and the enclosed documents has been read and understood. The operation manual must be stored in a well-known place within easy reach; it must be consulted even in case of the slightest doubt.

The manufacturer cannot be held liable for damage to persons, animals, objects or to the machine itself, which are caused by inexpert operation, non-compliance or insufficient compliance with the safety criteria indicated in these operation manual, and/or by modifications to the machine or the use of inadequate spare parts.

If in doubt, the text of the original operating instructions apply.

This operating manual plus the documents mentioned in the Annex must be available to the maintenance staff.

The plant operating company is responsible for ensuring that these documents are always accessible to the staff.

Version 2.0 **Translation of the original operating instructions** **Status 01-2014**

Version	Date	Modification	Modified by
2.0	01/2014	Anpassung MRL 2006/42/EG	TP
.			

These documents and all attachments are not subject to updates!

Index

1.1 Description

Conveyor belt TBK
Series: TBK 24, TBK/TBM 110, TBK/TBM 230, TBK/TBM 400, TBK/TBM 460

1.2 Manufacturer & service

INTEC-Automationsprodukte für Industrietechnik GMBH
Werner-von-Siemens-Str. 11
D-93128 Regenstauf

Phone: +49 (0) 94 02 / 93 29 - 0
Fax: +49 (0) 94 02 / 93 29 - 33

E-Mail: info@intec-ger.de
Internet: www.intec-ger.de

1.3 Use

1.3.1 Use within the intended fields of application

The conveyor belt is exclusively used for supply, refilling or conveying of specific product parts. The smallest lateral length of these product parts must be at least 2 mm. Smaller product parts may get under the belt and cause the conveyor belt to get damaged or to break down.
Standard belts can only handle dry and clean product parts without sharp edges. For other product parts (oily, wet, hot >70°C) special belts must be used. Product parts should not be dropped from large heights onto the conveyor belt. In case of doubt please consult with the manufacturer. The conveyor belt is designed for horizontal transport at maximum load. If you are planning to operate the conveyor belt in slightly inclined position, please consult with the manufacturer regarding your specific case and which use values have to be maintained.
Refer to chapter 1.4 "Technical data" for the permitted belt load.

Application areas:
- Parts supply for sorting and feeding equipment,
- Loading of packaging systems,
- Loading of weighing machines and counting equipment,
- Metered parts supply, also at manual workplaces
- Can be used in the food and pharmaceutical sector.

Please refer to chapter 3 “Main components” for information regarding the functional design.

WARNING

After integration of the conveyor belt into a complex machine, all requirements of the EU Machinery Directive regarding safety and occupational health must be met.

The use within the intended fields of application also includes:
- Observation of all notes in the operating instructions.
- Compliance with all inspection and maintenance works.
- Observation of the general and special security notes in these operating instructions and the relevant provisions for accident prevention.

Any other use or any use in excess thereof shall be considered not in accordance with the intended use. *INTEC Automationsprodukte für Industrietechnik GmbH* shall not be held liable for damages caused by that.

1.3.2 Improper use

Improper use, which can cause risks for the conveyor belt, the operator and third parties, is among others:

Use of the conveyor belt contrary to its intended use (chapter 1.3.1), especially with respect to:
Loading of the conveyor belt with product parts shaped differently than intended for the conveyor belt.
Loading of the conveyor belt with parts coated with oil, grease or any other coating.

Deployment of unqualified personnel. See chapter 2 “Safety”.

Operation of the conveyor belt contrary to the provisions in the operating manual, regarding: Safety, transport, installation, operation & use, setup, maintenance & repair. It is prohibited to bypass or disable safety and protective equipment. Only skilled, briefed personnel may perform work on conveyor belt and equipment.

Operation of the conveyor belt in case if malfunctions / technical efficiencies, e.g. missing safety equipment, faulty or damaged product parts.

Operation of the conveyor belt in case of organizational efficiencies: e.g. deployment of unsuitable operating personnel, application of unsuitable work procedures.

Repair, cleaning and maintenance work without securing or shutting the conveyor belt.

WARNING

No modifications, attachments and alterations must be performed without the manufacturer's prior approval.

Only parts and auxiliary materials approved by the manufacturer for the use with this conveyor belt may be used as spare parts and auxiliary materials.

The manufacturer shall not be held liable for damages caused by improper use of the equipment.

Risk of accidents, injuries and property damage exist in case of improper use of the conveyor belt. Thus, improper use shall not be permitted.

1.4 Technical data

Protection class: The conveyor belts of these series comply with protection class IP 54.

Conveyor belt (terminal drive) with 24V-direct current drive 0.1 m/min – 9.5 m/min belt speed

Aricle number	TBK 24-0,1	TBK 24-0,4	TBK 24-0,8	TBK 24-4,5	TBK 24-9,5
Belt speed	0.1 m/min	0,4 m/min	0,8 m/min	4,5 m/min	9,5 m/min
Max belt load	**25 kg**	**23 kg**	**6 kg**	**2 kg**	**1 kg**
Nominal voltage [V]	**24V=**	**24V=**	**24V=**	**24V=**	**24V=**
Current consumption [A]	**0,4**			**3,0**	
Motor output [W]	**10**			**54**	
Operating temperature [°C]	**-5° to +60°**				

Conveyor belt (terminal or central drive) with 110/230V-alternating current drive 0.85 m/min – 16.0 m/min belt speed

Aricle number	TBK 110-…	TBK 230-…	TBM 110-…	TBM 230-…
Belt speed	0,85 – 16,0 m/min			
Mix belt load	**2,5 kg at 16,0 m/min**			
Max belt load	**40 kg at 0,85m/min**			
Nominal voltage [V]	**110V/60Hz 230V/50Hz**			
Current consumption [A]	**0,4A at 230V**			
Motor output [W]	**0,09**			
Operating temperature [°C]	**-5° to +60°**			

Conveyor belt (terminal or central drive) with 400/460V-three-phase current drive 0.85 m/min – 16.0 m/min belt speed

Aricle number	TBK 400-…	TBK 460-…	TBM 400-…	TBM 460-…
Belt speed	0,85 – 16,0 m/min			
Mix belt load	**3 kg at 16.0 m/min**			
Max belt load	**50 kg at 0,85m/min**			
Nominal voltage [V]	**400V~460V 50Hz~60Hz**			
Current consumption [A]	**0.4A at 230V**			
Motor output [W]	**0,09**			
Operating temperature [°C]	**-5° to +60°**			

1.5 Dimensions

All conveyor belt drive variants

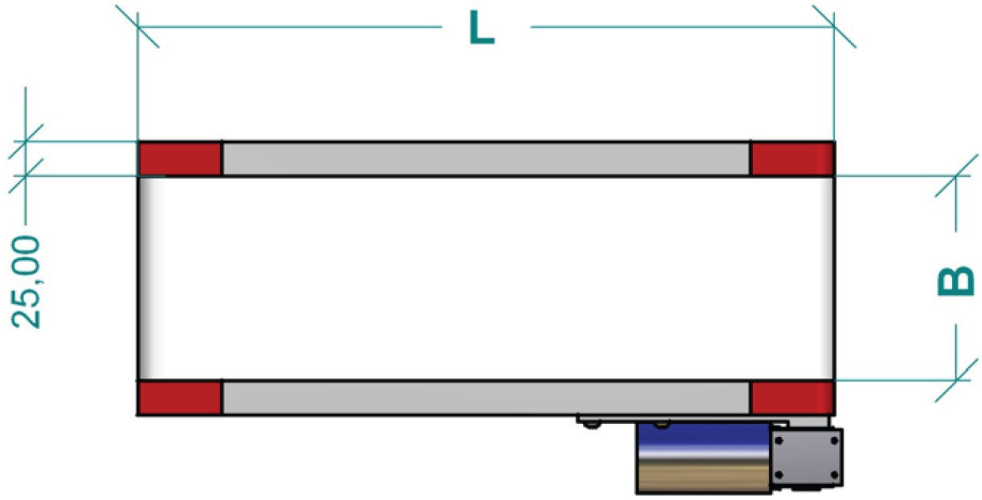

Aricle number	Min. belt length	Max. belt length	Min. belt width (usable width)	Max. belt width (usable width)
TBK 24-0,1	180	3500	50	350
TBK 24-0,4	180	3500	50	350
TBK 24-0,8	180	3000	50	300
TBK 24-4,5	180	3500	50	200
TBK 24-9,5	180	3500	50	150
TBK 110/230	300	3500	50	350
TBM 110/230	600	4000	50	400
TBK 400/460	300	3500	50	350
TBM 400/460	600	4000	50	400

All data in the tables in chapter 1.5 "Dimensions" are stated in mm.

1.6 Noise level

Air-borne noise:	Measuring process:____in-process measurement Measuring instrument:__DIN IEC 651 Measuring code:_____DIN EN ISO 11202 Background noise:_____none Operating conditions:___conveying mode, without conveyed Measuring point:_____1 m sideways distance, 1.6 m height LpA:_____≤ 70 dB(A)

2.1 Marking of instructions in the operating manual

Signal words contained in the operating instructions:
The following warnings specify a certain level of hazard:

DANGER

This signal word specifies a hazard involving a high level of risk which, if not avoided,
will result in death or severe injury.

WARNING

This signal word specifies a hazard involving a medium level of risk which, if not avoided,
will result in death or severe injury.

CAUTION

This signal word specifies a hazard involving a low level of risk which, if not avoided,
may result in minor or moderate injury.

Instructions on the machine:
Notes attached right to the machine must be observed under any circumstances.

2.2 Staff qualification and training

The staff for operation, maintenance, inspection and installation must show sufficient qualification of these activities.

Competences and survey of the staff must be carefully organized by the manager. If the staff do not dispose of the necessaryknowledge for this purpose, adequate instruction and training will be necessary. At the order of the manager, this instruction and training can be effected by the producer himself. Furthermore, the manager has to guarantee that the staff has entirely understood the contents of this operation manual.

WARNING

Only staff members who have specialist, proven knowledge are allowed to perform maintenance work. To this effect, the persons instructed to do the work must dispose of different skills depending on the scope and the degree of difficulty of the maintenance work assigned to them.

Definition: Instructed staff
An instructed staff member is any person who has been informed about the tasks assigned to her or him and the possible dangers in case of inappropriate behavior and who has been trained and advised on the required protective equipment, if necessary.

Definition: Specialists
Specialists are workers who, due to their special training, knowledge and experience as well as the knowledge of the applicable provisions, are capable of judging the work assigned to them and recognizing possible dangers.
In addition to their (general) training, specialists must also be briefed in features and specific safety requirements of the conveyor belt.

Mandatory qualification requirement
If personnel do not have the required knowledge, they must be trained accordingly. The carrier of the conveyor belt is responsible for verifying professional qualification and education of the operating personnel.

2.3 Safety information

Our conveyor belts are built according to state-of-the-art technology and accepted safety regulations. This operating manual contains basic information ensuring failure-free and safe operation. Thus, it must absolutely be read by the responsible personnel/carrier and always be available at the site of operation of the conveyor belt.

Information and labels attached to the conveyor belt must be maintained in readable condition and may not be removed! After cable, line and component replacement, all existing labels and signs must be respectively reinstalled or newly installed.

Occupational health and safety information refer to the currently valid guidelines of the European Community. Please also comply with accident prevention regulations for continuous conveyors and electrical equipment. Furthermore, respective laws and country-specific provisions must be observed and met other countries.

The employees must be instructed with regard to risks and the necessary protective measures at regular intervals, at least however once per year.

The carrier of theconveyor belt must prepare working instructions for handling of product parts. The conveyor belt operator must completely observe these instructions. For issues related to occupational health and safety (e.g. handling of cleaning agents), the carrier must prepare operating instructions.

Commissioning, maintenance and repair may only be performed by specialists.

WARNING

For commissioning, maintenance, repair and troubleshooting activities, the conveyor must be disconnected from the power supply. Work on electrical equipment may only be performed by skilled electricians / electrical specialists. Risk of injury and electric shock exists! Make sure that the protective earthing of the power supply is in faultless condition.

Noise emission:
The permanent noise level amounts to maxim 70 dB(A). Product parts transport or belt consistency can cause a higher noise level. For these special cases inquire with the manufacturer regarding noise protection measures.

>>

2.3 Safety information (continued)

>>

WARNING

Hopper belt and specific belts:
If despite the extremely low belt speed, due to the equipment layout or application, operators are exposed to risks due to pulling in of body parts, the conveyor belt carrier must provide appropriate covers of the hazardous locations.

Protection class:
If the conveyor belt is used in wet or humid environment (wet area), then it must be ensured that the protection class of the delivered is sufficient.

3.1 Basic Construction

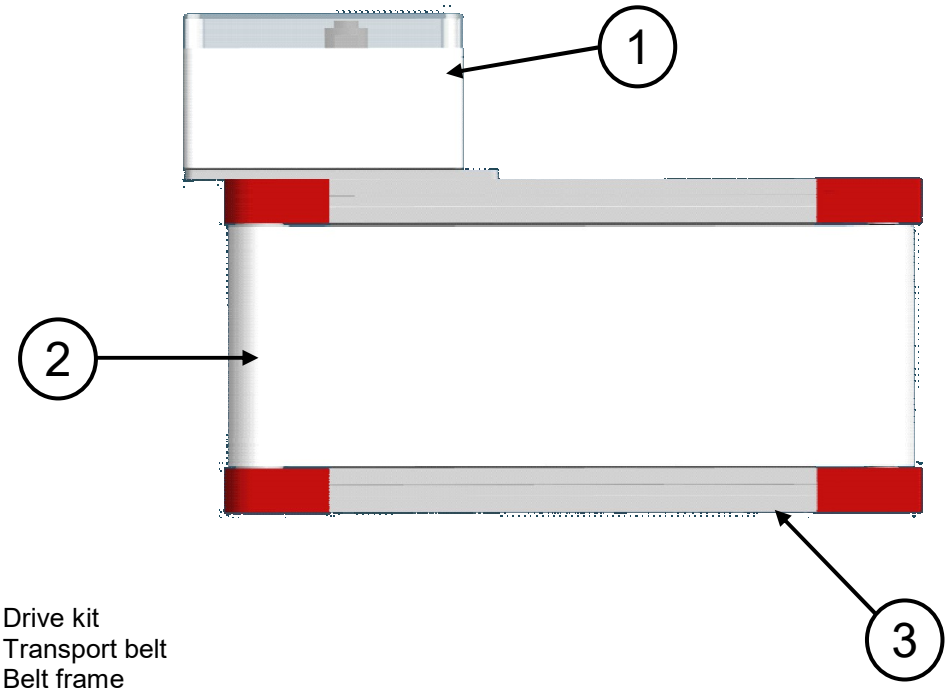

1 Drive kit
2 Transport belt
3 Belt frame

3.2 Equipment description

The conveyor belt is exclusively used for supply, refilling or conveying of specific product parts.

The INTEC conveyor belt is based in a conveyor, which transports parts. In all construction sizes, the conveyor belt is driven by a direct current gear motor. Optionally a three-phase motor can be used. As direct drive gear motors feature a preferred rotational direction, changing the running direction of the conveyor belt by reversing the polarity of the drive voltage impacts the motor life time. However, reverse operation is not required for proper use of the conveyor belt.

Application areas:

- Parts supply for sorting and feeding equipment,
- Loading of packaging systems,
- Loading of weighing machines and counting equipment,
- Metered parts supply, also at manual workplaces
- Can be used in the food and pharmaceutical sector.

4.1 Transport information

The conveyor belt is packed and transported in a crate.
The conveyor belt centre is the centre of gravity.
The crate should be transported using a solid transport trolley.
They weight depends on the conveyor belt configuration and can be found in the transport documentation.
Prior to transport, disconnect the conveyor belt from the power supply.

4.2 Safe installation information

WARNING

Assembly work may only be performed by specialists.

Make sure that the conveyor belt cannot be started by unauthorized persons prior to performing setup work on the conveyor belt. Mount warning and information signs clearly visible prior to work start!

Only use proper tools, especially spanners, which do fit and are not widened. Do not work with oily hands. Accidents due to slipping!

Make sure, that disassembled protection devices are reinstalled prior to first restarting.

Test runs: Verify that no tools, screws, auxiliary material or items are within the effective range of the conveyor belt.

During assembly make sure that the belt run is not restricted.

4.3 Installation site

The conveyor belt should be installed on a solid, horizontal and flat base, plate, pedestal or similar or on a stand to avoid distortion of the aluminium profiles and ensure centred running of the belt.. It is not absolutely necessary to bolt the unit to the base; however, the unit must then be secured against possible falling down.

CAUTION

During installation of the conveyor belt ensure that the belt is not exposed to strong heat. Otherwise, the belt could stretch and slip of the crosshead dies. Keep oil, swarf, etc. away from the conveyor belt.

Installation in explosion hazardous areas is prohibited.

4.4 Assembly and electrical connection

The delivered conveyor belt is completely assembled and must only be integrated into the control mechanism of an existing system. Furthermore, electrical power supply must be ensured. For fixed installation, T-slots can be found in the lateral aluminium profiles suitable for fastening. If the unit is equipped with assembly rails, then they can be used for fastening the conveyor belt. After each assembly, the belt run must be checked for centred running and adjusted if necessary. (See chapter 7.3 "Settings")

The 24V= drive unit may only be supplied with 24 V direct current. Proper polarity of the connections must be observed. The installation of the protective earthing conductor must be ensured as well.
The 230 V drive unit may only be supplied with 230V alternating current.
The 400 V drive unit may only be supplied with 400V three-phase current.
The respective connection cable must be equipped with a properly connected protective earthing conductor.
The electrical diagram at the inside of the motor housing lid must be observed. The unit may only be connected by authorized personnel.

WARNING

In case of malfunctions, the system must be disconnected from the power supply.

The electrical connection according to the enclosed electrical diagram my only be performed by electrical specialists. At the factory, all connections for motor, control board, etc., are connected to a terminal. Furthermore, the unit is already earthed. For cable penetration into the motor housing, a screw connection is located at the face side of the housing. Ensure a sufficient supply diameter. The connection cable must be equipped with a properly connected protective earthing conductor. Instead of targeting continuous running of the conveyor belt, delayed starting/stopping of the conveyor belt by min/max control of the conveyor unit to be fed, should be targeted.

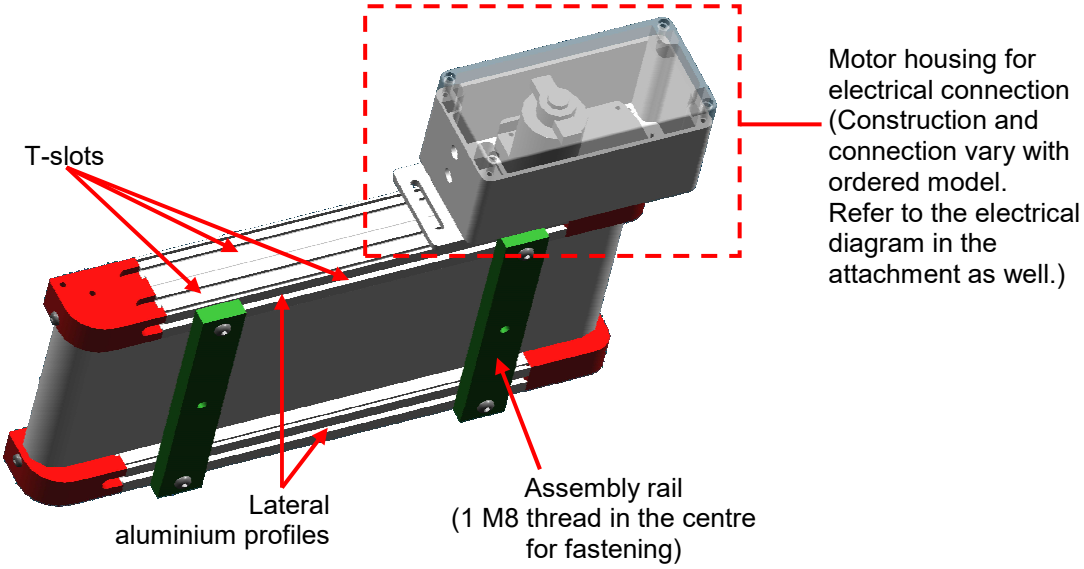

5.1 Safety information

WARNING

Observe the safety instructions set out in chapter 2 “Safety” of this manual.

Define the responsibilities of the commissioning staff, and authorize them to refuse the execution of unsafe instructions issued by third parties.

Only work on this conveyor belt, if you were briefed regarding handling with respect to your function.

Prior to commissioning, check the conveyor belt for correct settings and for all required safety devices.

Basically no safety devices may be disabled, removed or bypassed.

Prior to shift start, briefed and trained personnel must check safety and protective devices for proper condition. If deficiencies are detected, which impact the safety of the conveyor belt, the conveyor belt must be shut down until these deficiencies are corrected.

Do not perform any cleaning activities after switching the conveyor belt on

Operating personnel are not allowed to carry out any work on the electrical equipment. Refer to the equipment signs and labels attached to the conveyor belt. Label: Lightning flash.

Do not reach into the conveyor belt or transported material while the conveyor belt is running.

Faulty machine components must be replaced as soon as possible. Please use the enclosed spare parts list to identify required spare parts.

5.2 Commissioning

Verify correct installation according to chapter 4 “Transport & assembly”.

The conveyor belt is not equipped with a control unit and must be controlled by the system, into which the conveyor belt is integrated.

Verification of the belt run:
During first commissioning, the belt run must be checked for centred running and adjusted if necessary. (See chapter 7.3 "Settings")

5.3 System filling

According to the maximum filling weight. The permitted limits of your conveyor belt can be found in the table in chapter 1.4 "Technical data".

6.1 Wear and spare parts

Defective machine parts should be replaced as soon as possible. Please use the spare parts list enclosed in the attachment to identify required spare and wear parts.

WARNING

Only original parts or parts with equivalent quality maybe used for parts replacement.

6.2 Inspection

As needed.
Clean the conveyor belt and both crosshead dies using cleaning alcohol and a clean, lint-free cloth. When used in the food industry, an approved cleaning alcohol replacement must be used.

After two weeks of initial running:
Check tension and concentricity of the conveyor belt and adjust if necessary.
Afterwards checks in 4-weeks intervals.

After 200 operating hours:
Replace the carbon brush in direct current motors (if applicable for your conveyor belt). Thoroughly clean the surroundings. Besides that, gear motors are maintenance-free for 10000 operating hours. If required, dust entire motor area to ensure optimum cooling

6.3 Settings

Belt tension:
At the factory, the belt is tensioned and aligned on drive and guide rollers.
Belt tension must be adjusted to ensure that even at maximum belt load (observe max. belt load of your conveyor belt type!) the conveyor belt does not slip. Belt tension is adjusted by turning the round head screws on the tension-crosshead dies. Clockwise turning increases belt tension. At the same time, the belt alignment to centre can be impacted. The conveyor belt must run concentric between the head pieces. If the belt touches one of the head pieces, then the concentric run must be corrected to avoid increased belt wear. For this purpose, the round head screw on the tension crosshead die, which the belt touches, must be tightened or the screw of the opposite tension crosshead die must be loosened. Observe belt tension!

⚠ CAUTION

If the belt is to tight, belt, bearings as well as drive can be overloaded. After fine adjustment, measure the current consumption of the motor. If it exceeds the nominal data on the name plate, the round head screws must be evenly loosened. After adjustment, a test turn must be performed for several hours. After first commissioning, the belt alignment to center must be verified several times a day.

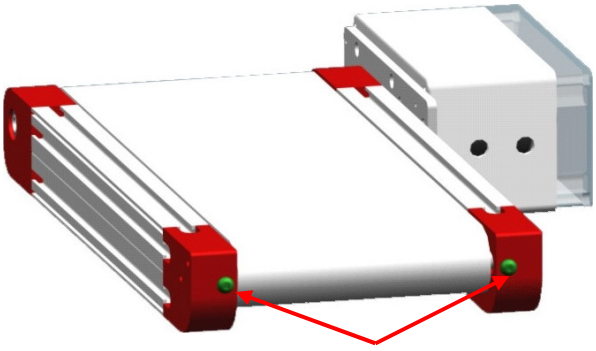

Tensioning screws
on the tension
crosshead die

6.4 Replace transport belt

1. Disassemble mounting beams
   (marked in green - see illustration)

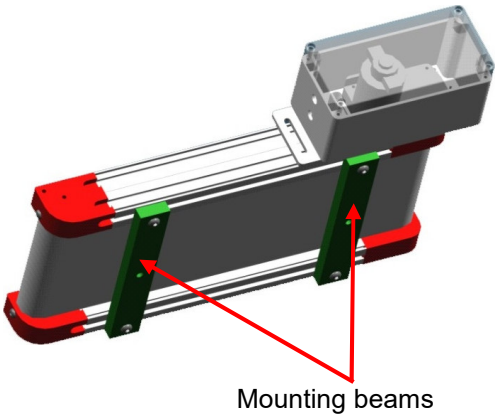

2. Loosen and disassemble tensioning screw on the tension crosshead die
   (marked in green - see illustration)

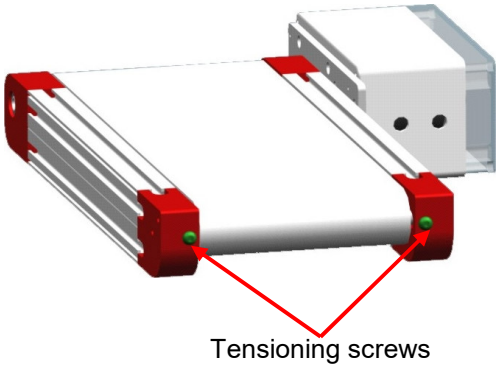

3. Move belt on the lower side of the transport body to the side and loosen the set screws on one side of the cross beam
   (marked in green - see illustration)

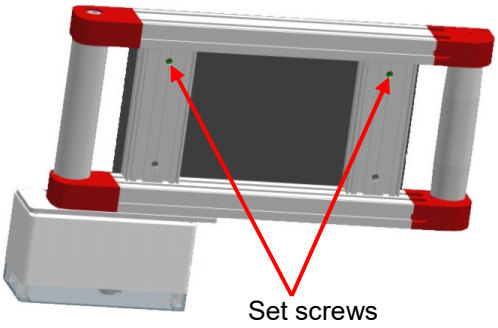

4. Loosen and disassemble tensioning screw on the tension crosshead die
   (marked in green - see illustration)

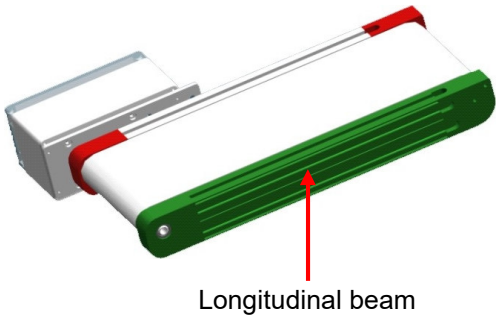

5. Pull transport belt off
   (marked in green - see illustration)

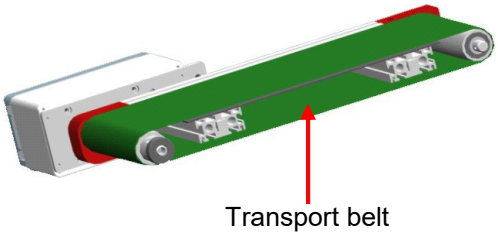

>>

6.4 Replace transport belt (continued)

>>

7. Slip new belt on the transport belt body and assemble conveyor belt in reverse sequence.

8. Assembly and setup checklist

a) Make sure both longitudinal beams are perpendicular (see illustration)

b) Avoid twisting/warping while tightening the set screws (cross beams - see point 4)

c) Uniformly tension the transport belt. Make sure, the belt is properly aligned to the centre (see illustration)

d) Do not "over-tension" the belt (see Operating Manual)

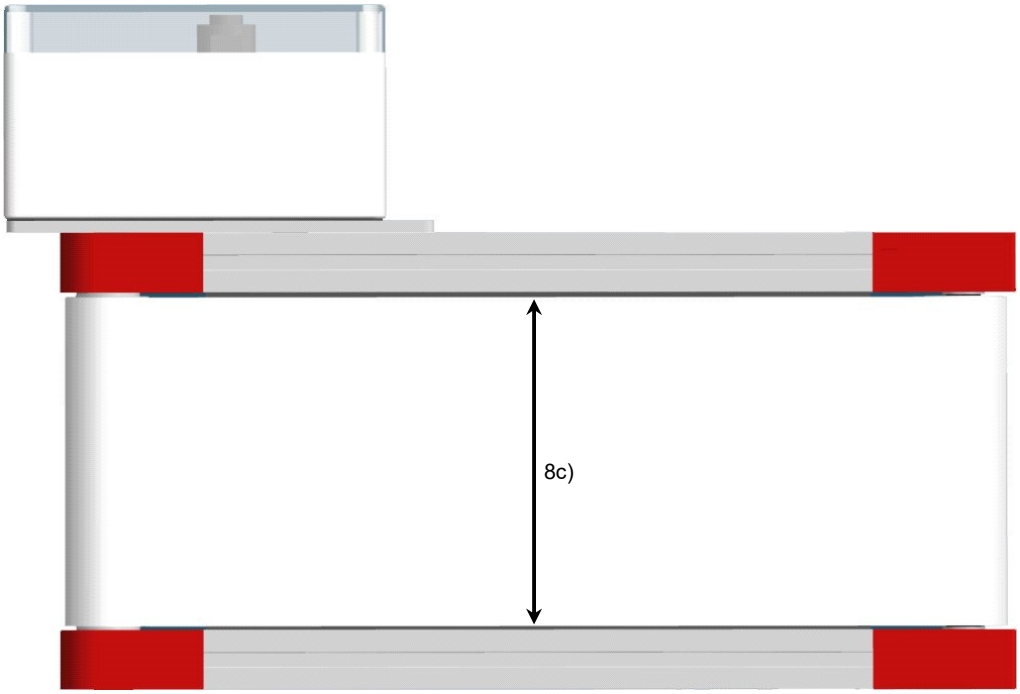

Declaration of Conformity according to EC directive for machines (2006/42/EC, annex II A)

The manufacturer,

INTEC-Automationsprodukte für Industrietechnik GMBH
Werner-von-Siemens-Str. 11
D-93128 Regenstauf

Phone: +49 (0) 94 02 / 93 29 - 0
Fax: +49 (0) 94 02 / 93 29 - 33

E-Mail: info@intec-ger.de
Internet: www.intec-ger.de

declare in exclusive responsibility, that the machine,

Description: Conveyor Belt TBK
Series: TBK 24, TBK/TBM 110, TBK/TBM 230, TBK/TBM 400, TBK/TBM 460
Year of construction: 2020

conforms to all the relevant regulations of the directive Machines (2006/42/EC).

Moreover, the machine conforms to all the regulations in the directives Electrical Operating Equipment (2006/95/EC) and Electromagnetic Compatibility (2004/108/EC).

The following harmonized standards were applied:

DIN EN 12100	Safety of machinery - Basic concepts, general principles for design,
DIN EN 60204-1	Safety of machinery - Electrical equipment of machines, Part 1: General requirements

The person responsible for the documentation is: **Mr. Max (General Manager)**

Place, Date: .....

Signatory and information on signatory: .....

Signature: .....