INTEC

Operating Manual

Steep Hopper STB

Series

STB 25, STB 50, STB 100, STB 200, STB 400

This operation manual is a part of the technical documentation of the respective steep hopper according to the EC directives for machines.

This operation manual corresponds with MRL Annex. I 1.7.4.

These operation manual is intended for the plant manager, who must pass them on to the staff who is responsible for the installation, connection, operation and maintenance of the machine. He must make sure that the information contained in the operation manual and the enclosed documents has been read and understood. The operation manual must be stored in a well-known place within easy reach; it must be consulted even in case of the slightest doubt.

The manufacturer cannot be held liable for damage to persons, animals, objects or to the machine itself, which are caused by inexpert operation, non-compliance or insufficient compliance with the safety criteria indicated in these operation manual, and/or by modifications to the machine or the use of inadequate spare parts.

If in doubt, the text of the original operating instructions apply.

This operating manual plus the documents mentioned in the Annex must be available to the maintenance staff.

The plant operating company is responsible for ensuring that these documents are always accessible to the staff.

Version 2.0 **Translation of the original operating instructions** **Status 01-2014**

Version	Date	Modification	Modified by
2.0	01/2014	Anpassung MRL 2006/42/EG	TP
.			

These documents and all attachments are not subject to updates!

Index

1.1 Description

Steep hopper STB
Series: STB 25, STB 50, STB 100, STB 200, STB 400

1.2 Manufacturer & service

INTEC-Automationsprodukte für Industrietechnik GMBH
Werner-von-Siemens-Str. 11
D-93128 Regenstauf

Phone: +49 (0) 94 02 / 93 29 - 0
Fax: +49 (0) 94 02 / 93 29 - 33

E-Mail: info@intec-ger.de
Internet: www.intec-ger.de

1.3 Use

1.3.1 Use within the intended fields of application

The steep hopper is exclusively used for supply, refilling or conveying of specific product parts. The smallest lateral length of these product parts must be at least 2 mm. Smaller product parts may get under the belt and cause the steep hopper to get damaged or to break down.
Standard belts can only handle dry and clean product parts without sharp edges. For other product parts (oily, wet, hot >70°C) special belts must be used. Product parts should not be dropped from large heights onto the conveyor belt. In case of doubt please consult with the manufacturer. The steep hopper is designed for the transport at maximum load for an angle of inclination between 40° and 60°. If you are planning to operate the steep hopper in different angles of inclination, please consult with the manufacturer regarding your specific case and which use values have to be maintained.
Refer to chapter 1.4 "Technical data" for the permitted belt load.

Application areas:
- Parts supply for sorting and feeding equipment,
- Loading of packaging systems,
- Loading of weighing machines and counting equipment,
- Metered parts supply, also at manual workplaces
- Can be used in the food and pharmaceutical sector.

Please refer to chapter 3 “Main components” for information regarding the functional design.

WARNING

After integration of the steep hopper into a complex machine, all requirements of the EU Machinery Directive regarding safety and occupational health must be met.

The use within the intended fields of application also includes:
- Observation of all notes in the operating instructions.
- Compliance with all inspection and maintenance works.
- Observation of the general and special security notes in these operating instructions and the relevant provisions for accident prevention.

Any other use or any use in excess thereof shall be considered not in accordance with the intended use. *INTEC Automationsprodukte für Industrietechnik GmbH* shall not be held liable for damages caused by that.

1.3.2 Improper use

Improper use, which can cause risks for the steep hopper, the operator and third parties, is among others:

Use of the steep hopper contrary to its intended use (chapter 1.3.1), especially with respect to:
Loading of the steep hopper with product parts shaped differently than intended for the steep hoppe.
Loading of the steep hopper with parts coated with oil, grease or any other coating.

Deployment of unqualified personnel. See chapter 2 “Safety”.

Operation of the steep hopper contrary to the provisions in the operating manual, regarding: Safety, transport, installation, operation & use, setup, maintenance & repair. It is prohibited to bypass or disable safety and protective equipment. Only skilled, briefed personnel may perform work on steep hopper and equipment.

Operation of the steep hopper in case if malfunctions / technical efficiencies, e.g. missing safety equipment, faulty or damaged product parts.

Operation of the steep hopper in case of organizational efficiencies: e.g. deployment of unsuitable operating personnel, application of unsuitable work procedures.

Repair, cleaning or maintenance work without securing or shutting the steep hopper down.

WARNING

No modifications, attachments and alterations must be performed without the manufacturer's prior approval.

Only parts and auxiliary materials approved by the manufacturer for the use with this steep hopper may be used as spare parts and auxiliary materials.

The manufacturer shall not be held liable for damages caused by improper use of the equipment.

Risk of accidents, injuries and property damage exist in case of improper use of the steep hopper. Thus, improper use shall not be permitted

---

1.4 Technical data

Protection class: The steep hoppers of these series comply with protection class IP 54

Steep hopper with 115V/60Hz and 230V/50Hz alternating current drive 1.4 m/min belt speed

Article number for 115V/60Hz	STB 25-115	STB 50-115	STB 100-115	STB 200-115	STB 400-115
Article number for 230V/50Hz	STB 25-230	STB 50-230	STB 100-230	STB 200-230	STB 400-230
Max. filling volume	**25 l**	**50 l**	**100 l**	**200 l**	**400 l**
Max. filling weight (1,4**m/min**)	**60 kg**	**70kg**	**80kg**	**80kg**	**80kg**
Nominal voltage [V]	**115V/60Hz 230V/50Hz**				
Current consumption [A]	**0,7A at 230V**				
Motor output [W]	**90**				
Operating temperature [°C]	**-5° to +60°**				

Steep hopper with 400V/50Hz and 460V/60Hz three-phase current drive 1.4 m/min belt speed

Article number for 115V/60Hz	STB 25-400	STB 50-400	STB 100-400	STB 200-400	STB 400-400
Article number for 230V/50Hz	STB 25-460	STB 50-460	STB 100-460	STB 200-460	STB 400-460
Max. filling volume	**25 l**	**50 l**	**100 l**	**200 l**	**400 l**
Max. filling weight (1,4**m/min**)	**70kg**	**80kg**	**90kg**	**100kg**	**100kg**
Nominal voltage [V]	**400V~460V 50Hz~60Hz**				
Current consumption [A]	**0,4**				
Motor output [W]	**90**				
Operating temperature [°C]	**-5° to +60°**				

Heavt duty version steep hopper with 400V/50Hz and 460V/60Hz three-phase drive

Article number for 115V/60Hz	STB 25-400	STB 50-400	STB 100-400	STB 200-400	STB 400-400
Article number for 230V/50Hz	STB 25-460	STB 50-460	STB 100-460	STB 200-460	STB 400-460
Max. filling volume	**25 l**	**50 l**	**100 l**	**200 l**	**400 l**
Max. filling weight (1,4**m/min**) and Shear stress design	**200kg Component-specific!**				
Nominal voltage [V]	**400V~460V 50Hz~60Hz**				
Current consumption [A]	**0,4**				
Motor output [W]	**90**				
Operating temperature [°C]	**-5° to +60°**				

1.5 Dimensions

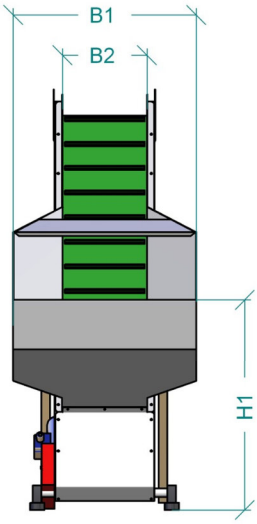

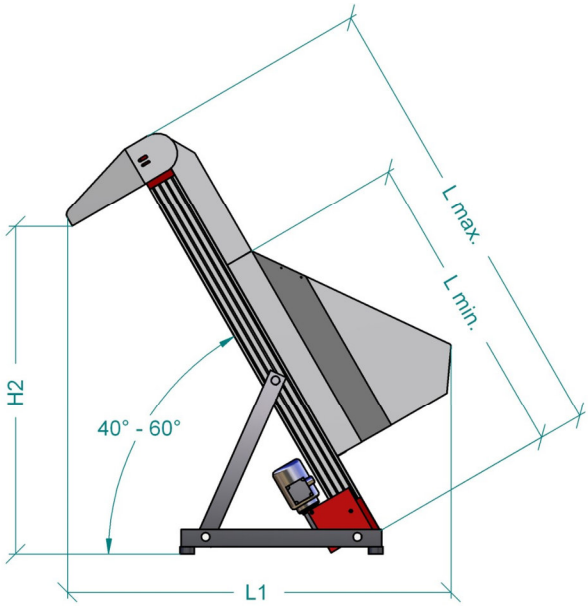

Aricle number	Litre	Kg	L1	L min	L max	B1	B2	H1	H2
STB 25	25	60 - 200	L1 depends on measure "L" and the inclined position	820	2870	400	180	approx. 600	H2 depends on measure "L" and the inclined position
STB 50	50	70 - 200		920	2970	510	230	approx. 670	
STB 100	100	80 - 200		1120	3170	640	300	approx. 750	
STB 200	200	80 - 200		1320	3370	860	350	approx. 860	
STB 400	400	80 - 200		1520	3570	1000	450	approx. 960	

1.6 Noise level

Air-borne noise:	Measuring process:____in-process measurement Measuring instrument:__DIN IEC 651 Measuring code:_____DIN EN ISO 11202 Background noise:_____none Operating conditions:___conveying mode, without conveyed Measuring point:_____1 m sideways distance, 1.6 m height LpA:_____≤ 70 dB(A)

2.1 Marking of instructions in the operating manual

Signal words contained in the operating instructions:
The following warnings specify a certain level of hazard:

DANGER — This signal word specifies a hazard involving a high level of risk which, if not avoided, will result in death or severe injury.

WARNING — This signal word specifies a hazard involving a medium level of risk which, if not avoided, will result in death or severe injury.

CAUTION — This signal word specifies a hazard involving a low level of risk which, if not avoided, may result in minor or moderate injury.

Instructions on the machine:
Notes attached right to the machine must be observed under any circumstances.

2.2 Staff qualification and training

The staff for operation, maintenance, inspection and installation must show sufficient qualification of these activities.

Competences and survey of the staff must be carefully organized by the manager. If the staff do not dispose of the necessary knowledge for this purpose, adequate instruction and training will be necessary. At the order of the manager, this instruction and training can be effected by the producer himself. Furthermore, the manager has to guarantee that the staff has entirely understood the contents of this operation manual.

WARNING

Only staff members who have specialist, proven knowledge are allowed to perform maintenance work. To this effect, the persons instructed to do the work must dispose of different skills depending on the scope and the degree of difficulty of the maintenance work assigned to them.

Definition: Instructed staff
An instructed staff member is any person who has been informed about the tasks assigned to her or him and the possible dangers in case of inappropriate behavior and who has been trained and advised on the required protective equipment, if necessary.

Definition: Specialists
Specialists are workers who, due to their special training, knowledge and experience as well as the knowledge of the applicable provisions, are capable of judging the work assigned to them and recognizing possible dangers.
In addition to their (general) training, specialists must also be briefed in features and specific safety requirements of the steep hopper.

Mandatory qualification requirement
If personnel do not have the required knowledge, they must be trained accordingly. The carrier of the steep hopper is responsible for verifying professional qualification and education of the operating personnel.

2.3 Safety information

Our steep hoppers are built according to state-of-the-art technology and accepted safety regulations. This operating manual contains basic information ensuring failure-free and safe operation. Thus, it must absolutely be read by the responsible personnel/carrier and always be available at the site of operation of the steep hopper.

Information and labels attached to the steep hopper must be maintained in readable condition and may not be removed! After cable, line and component replacement, all existing labels and signs must be respectively reinstalled or newly installed.

Occupational health and safety information refer to the currently valid guidelines of the European Community. Please also comply with accident prevention regulations for continuous conveyors and electrical equipment. Furthermore, respective laws and country-specific provisions must be observed and met other countries.

The employees must be instructed with regard to risks and the necessary protective measures at regular intervals, at least however once per year.

The carrier of the steep hopper must prepare working instructions for handling of product parts. The steep hopper operator must completely observe these instructions. For issues related to occupational health and safety (e.g. handling of cleaning agents), the carrier must prepare operating instructions.

Commissioning, maintenance and repair may only be performed by specialists.

WARNING

For commissioning, maintenance, repair and troubleshooting activities, the steep hopper must be disconnected from the power supply. Work on electrical equipment may only be performed by skilled electricians / electrical specialists. Risk of injury and electric shock exists! Make sure that the protective earthing of the power supply is in faultless condition.

Noise emission:
The permanent noise level amounts to maxim 70 dB(A). Product parts transport or belt consistency can cause a higher noise level. For these special cases inquire with the manufacturer regarding noise protection measures.

>>

2.3 Safety information (continued)

>>

WARNING

Hopper belt and specific belts:
If despite the extremely low belt speed, due to the equipment layout or application, operators are exposed to risks due to pulling in of body parts, the steep hopper carrier must provide appropriate covers of the hazardous locations.

Protection class:
If the steep hopper is used in wet or humid environment (wet area), then it must be ensured that the protection class of the delivered is sufficient.

3.1 Basic Construction

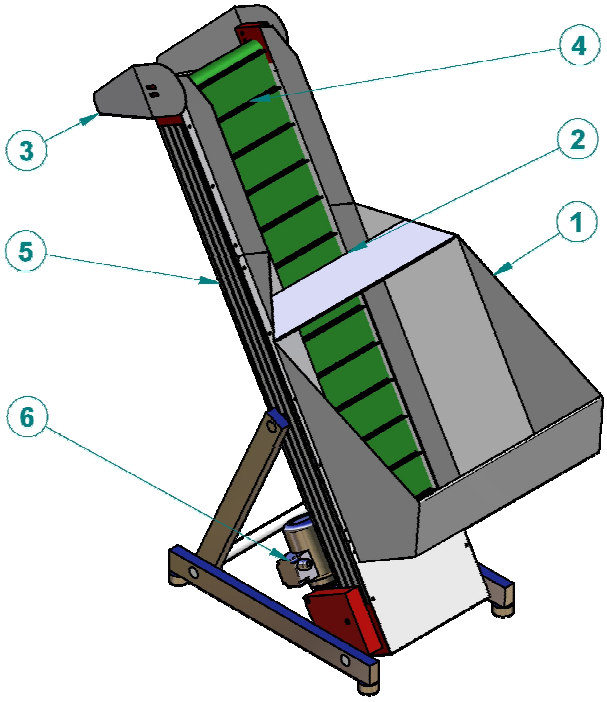

1 Hopper bowl
2 Front panel
3 Part chute (stufenlos justierbar)
4 Transport belt
5 Belt frame
6 Drive kit

3.2 Equipment description

The steep hopper is exclusively used for supply, refilling or conveying of specific product parts.

The INTEC steep hopper is based in a conveyor belt, which transports parts upwards to an inclined chute. To ensure a certain filling volume, a specific parts storage container is mounted onto this conveyor belt. For all construction sizes, the conveyor belt is driven by a three-phase motor.

Application areas:

- Parts supply for sorting and feeding equipment,
- Loading of packaging systems,
- Loading of weighing machines and counting equipment,
- Metered parts supply, also at manual workplaces
- Can be used in the food and pharmaceutical sector.

4.1 Transport information

The steep hopper is transported by a lift truck.
The steep hopper centre is the centre of gravity.
They weight depends on the steep hopper configuration and can be found in the transport documentation.
Prior to transport, disconnect the steep hopper from the power supply.

4.2 Safe installation information

WARNING

Assembly work may only be performed by specialists.

Make sure that the steep hopper cannot be started by unauthorized persons prior to performing setup work on the steep hopper Mount warning and information signs clearly visible prior to work start!

Only use proper tools, especially spanners, which do fit and are not widened. Do not work with oily hands. Accidents due to slipping!

Make sure, that disassembled protection devices are reinstalled prior to first restarting.

Test runs: Verify that no tools, screws, auxiliary material or items are within the effective range of the steep hopper.

During assembly make sure that the belt run is not restricted.

4.3 Installation site

The steep hopper should be installed on a solid, horizontal and flat base in order to avoid tilting of the steep hopper or distortion of the basic frame. It is not absolutely necessary to bolt the unit to the base; however, the unit must then be secured against possible falling over.

CAUTION

During installation of the steep hopper, ensure that the belt is not exposed to strong heat. Otherwise, the belt could stretch and slip of the crosshead dies. Keep oil, swarf, etc. away from the steep hopper.

Installation in explosion hazardous areas is prohibited.

4.4 Assembly and electrical connection

The delivered steep hopper is completely assembled and must only be integrated into the control mechanism of an existing system. Furthermore, electrical power supply must be ensured. For fixed installation, boreholes can be found in the vibration cushioned machine feet, through which the steep hopper can be securely tightened to the base. After each assembly, the belt run must be checked for centered running and adjusted if necessary. (See chapter 7.3 "Settings")

The 230 V drive unit may only be supplied with 230V alternating current.
The 400 V drive unit may only be supplied with 400V three-phase current.
The respective connection cable must be equipped with a properly connected protective earthing conductor.
The electrical diagram at the inside of the motor housing lid must be observed. The unit may only be connected by authorized personnel.

WARNING

In case of malfunctions, the system must be disconnected from the power supply.

The electrical connection according to the enclosed electrical diagram my only be performed by electrical specialists. For cable penetration into the motor housing, a screw connection is located at the face side of the housing. Ensure a sufficient supply diameter. The connection cable must be equipped with a properly connected protective earthing conductor. Instead of targeting continuous running of the steep hopper, delayed starting/stopping of the steep hopper by min/max control of the conveyor unit to be fed, should be targeted.

5.1 Safety information

WARNING

Observe the safety instructions set out in chapter 2 “Safety” of this manual.

Define the responsibilities of the commissioning staff, and authorize them to refuse the execution of unsafe instructions issued by third parties.

Only work on this steep hopper, if you were briefed regarding handling with respect to your function.

Prior to commissioning, check the steep hopper for correct settings and for all required safety devices.

Basically no safety devices may be disabled, removed or bypassed.

Prior to shift start, briefed and trained personnel must check safety and protective devices for proper condition. If deficiencies are detected, which impact the safety of the steep hopper, the steep hopper must be shut down until these deficiencies are corrected.

Do not perform any cleaning activities after switching the steep hopper on.

Operating personnel are not allowed to carry out any work on the electrical equipment. Refer to the equipment signs and labels attached to the steep hopper. Label: Lightning flash.

Do not reach into the conveyor belt or transported material while the steep hopper is running.

Faulty machine components must be replaced as soon as possible. Please use the enclosed spare parts list to identify required spare parts.

5.2 Commissioning

Verify correct installation according to chapter 4 “Transport & assembly”.

The steep hopper is not equipped with a control unit and must be controlled by the system, into which the steep hopper is integrated.

Verification of the belt run:
During first commissioning, the belt run must be checked for centered running and adjusted if necessary. (See chapter 7.3 "Settings")

5.3 System filling

According to maximum filling volume and maximum filling weight. The permitted limits of your steep hopper can be found in the table in chapter 1.4 "Technical data".

6.1 Wear and spare parts

Defective machine parts should be replaced as soon as possible. Please use the spare parts list enclosed in the attachment to identify required spare and wear parts.

WARNING

Only original parts or parts with equivalent quality maybe used for parts replacement.

6.2 Inspection

As needed.
Clean the conveyor belt and both crosshead dies using cleaning alcohol and a clean, lint-free cloth.
When used in the food industry, an approved cleaning alcohol replacement must be used.

After two weeks of initial running:
Check tension and concentricity of the conveyor belt and adjust if necessary.
Afterwards checks in 4-weeks intervals.

No other steep hopper component requires maintenance.

6.3 Settings

Parts chute:
The inclination of the chute can be adjusted after loosening the round head screws. When parts are supplied to pivoting conveyors, it must be observed that parts dropping from the chute, should fall centred into the unit, and not onto baffle plates, which could impact operation.

Seal curtain:
The seal curtain is located at the runout of the conveyor belt. In the case of large filling volumes in the hopper, it prevents too many parts falling from the chute while the system is not running. If larger parts to be conveyed do not fit through the curtain, then the customer should shorten the curtain using suitable tooling until parts can optimally pass.

Belt tension:
At the factory, the belt is tensioned and aligned on drive and guide rollers.
Belt tension must be adjusted to ensure that even for a full part storage container (observe max. belt load of your steep hopper type!) the conveyor belt does not slip. Belt tension is adjusted by turning the round head screws on the tension-crosshead dies. Clockwise turning increases belt tension. At the same time, the belt alignment to centre can be impacted. The conveyor belt must run concentric between the head pieces. If the belt touches one of the head pieces, then the concentric run must be corrected to avoid increased belt wear. For this purpose, the round head screw on the tension crosshead die, which the belt touches, must be tightened or the screw of the opposite tension crosshead die must be loosened. Observe belt tension!

⚠ CAUTION

If the belt is to tight, belt, bearings as well as drive can be overloaded. After fine adjustment, measure the current consumption of the motor. If it exceeds the nominal data on the name plate, the round head screws must be evenly loosened. After adjustment, a test turn must be performed for several hours. After first commissioning, the belt alignment to center must be verified several times a day.

>>

6.3 Settings (continued)

>>

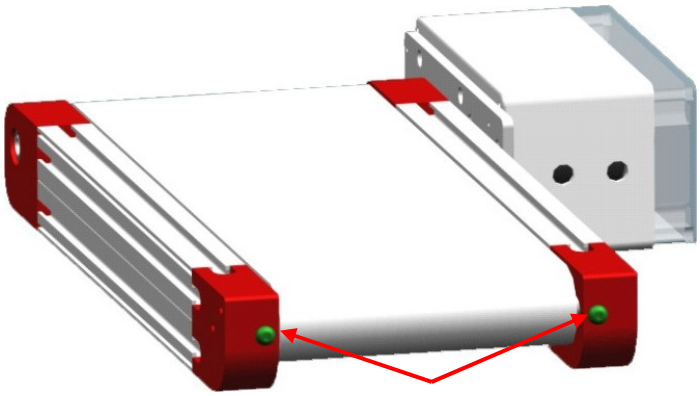

Chain tension (only for 230/400V drive)
Chain tension is adjusted by the manufacturer. Readjustment of the chain tension for 230/400V drives is usually not necessary. If necessary, the chain can be re-tightened by removing the drive cover of the 230/400V drive and adjusting the idler. Prior to that, the system must be disconnected from the power supply. Reinstall the drive cover after the adjustment!

6.4 Replace transport belt

1. Disassemble hopper bowl, frame and parts chute

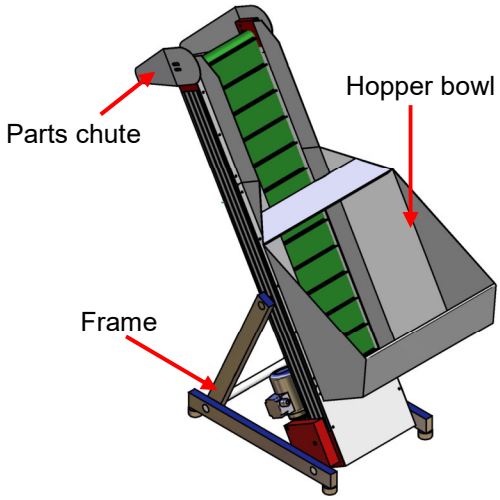

2. Loosen and disassemble tensioning screws on the tension crosshead die
(marked in green - see illustration)

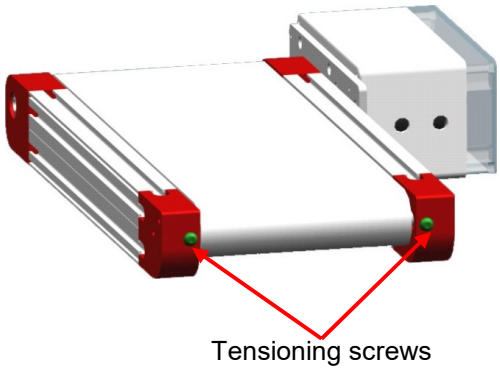

3. Move belt on the lower side of the transport body to the side and loosen the set screws on one side of the cross beam
(marked in green - see illustration)

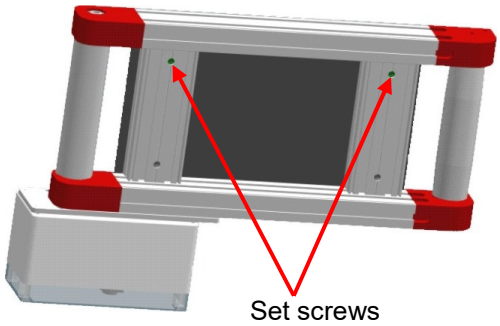

4. Pull longitudinal beams and crosshead dies down
(marked in green - see illustration)

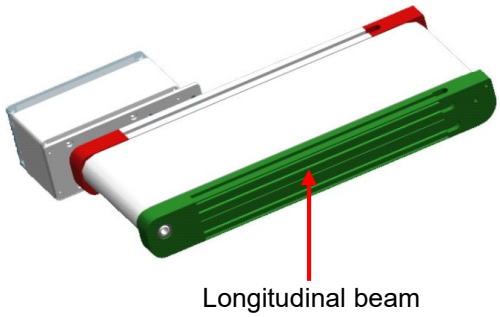

5. Pull transport belt off
(marked in green - see illustration)

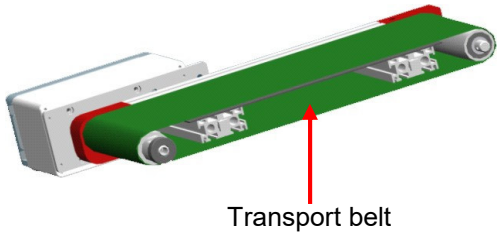

>>

6.4 Replace transport belt (continued)

>>

7. Slip new belt on the transport belt body and assemble steep hopper in reverse sequence.

8. Assembly and setup checklist

   a) Make sure both longitudinal beams are perpendicular (see illustration)

   b) Avoid twisting/warping while tightening the set screws (cross beams - see point 4)

   c) Uniformly tension the transport belt. Make sure, the belt is properly aligned to the centre (see illustration)

   d) Do not "over-tension" the belt (see Operating Manual)

   e) Make sure that the transport belt does not rub on the hopper bowl

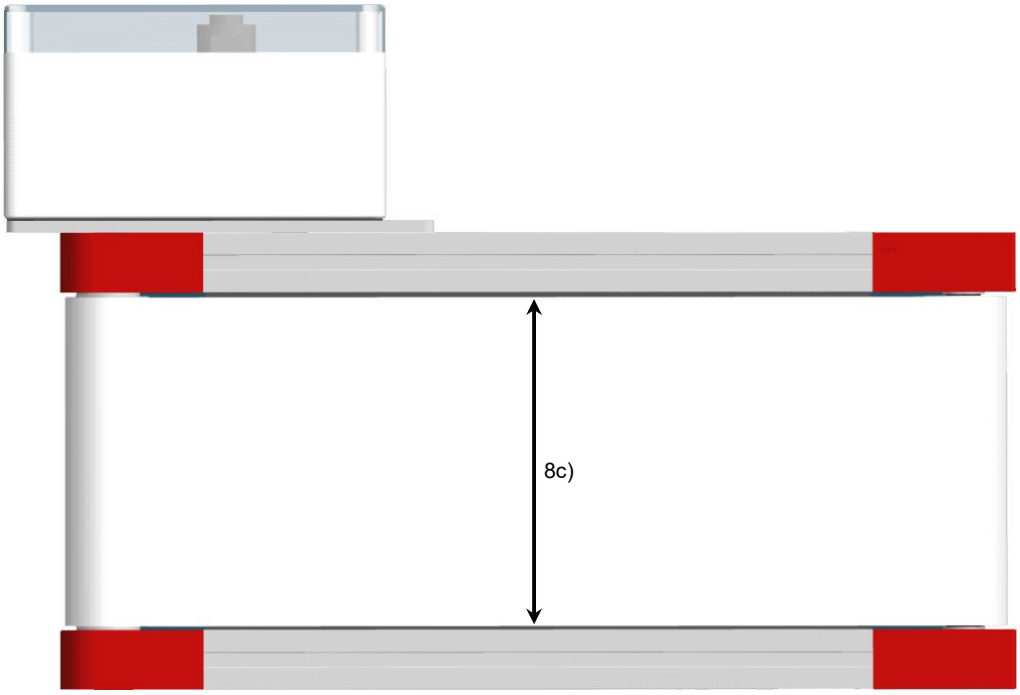

6.5 Troubleshooting

During transportation, product parts can get under the stationary protection cover and cause the transport belt to be stuck.

WARNING

Prior to troubleshooting the system must be electrically isolated.

The protective cover in the lower area of the steep hoper must be disassembled prior to troubleshooting. Next, the product parts causing the malfunction must be removed.

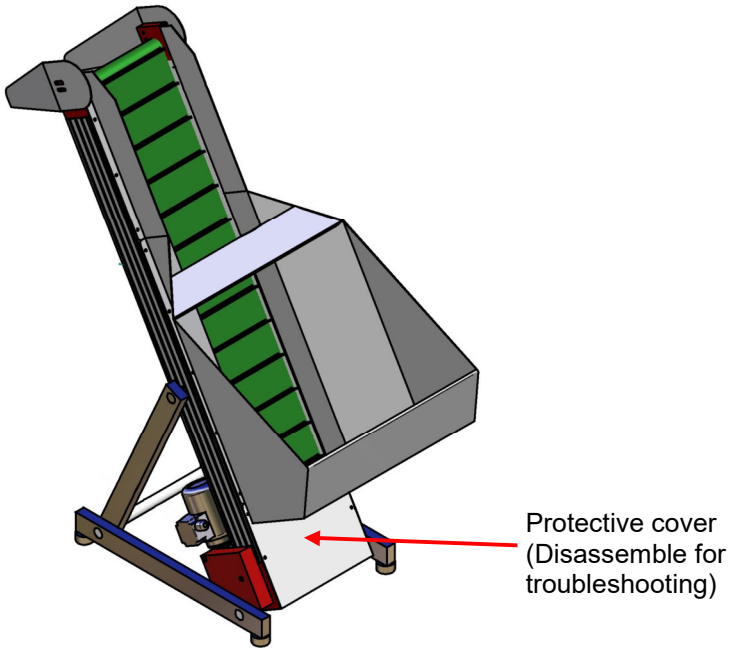

CAUTION

Prior to commissioning, the disassembled protective cover must be properly mounted again.

Declaration of Conformity according to EC directive for machines (2006/42/EC, annex II A)

The manufacturer,

INTEC-Automationsprodukte für Industrietechnik GMBH
Werner-von-Siemens-Str. 11
D-93128 Regenstauf

Phone: +49 (0) 94 02 / 93 29 - 0
Fax: +49 (0) 94 02 / 93 29 - 33

E-Mail: info@intec-ger.de
Internet: www.intec-ger.de

declare in exclusive responsibility, that the machine,

Description: Steep Hopper STB
Series: STB 25, STB 50, STB 100, STB 200, STB 400
Year of construction: 2020

conforms to all the relevant regulations of the directive Machines (2006/42/EC).

Moreover, the machine conforms to all the regulations in the directives Electrical Operating Equipment (2006/95/EC) and Electromagnetic Compatibility (2004/108/EC).

The following harmonized standards were applied:

DIN EN 12100	Safety of machinery - Basic concepts, general principles for design,
DIN EN 60204-1	Safety of machinery - Electrical equipment of machines, Part 1: General requirements

The person responsible for the documentation is: **Mr. Max (General Manager)**

Place, Date: .....

Signatory and information on signatory: .....

Signature: .....